BEND TABLE			
BEND ID	BEND DIRECTION	BEND ANGLE	BEND RADIUS
1	DOWN	90.001	.138
2	DOWN	90.001	.138
3	DOWN	90.001	.138
4	DOWN	90	.138
5	DOWN	90	.138
6	DOWN	90	.138
7	DOWN	90	.138
8	DOWN	90.001	.138

HOLE TABLE			
HOLE	XDIM	YDIM	DESCRIPTION
A1	16.02	8.71	Ø.41 THRU
A2	17.52	8.71	Ø.41 THRU
A3	38.27	8.71	Ø.41 THRU
A4	39.77	8.71	Ø.41 THRU
A5	60.27	8.71	Ø.41 THRU
A6	61.77	8.71	Ø.41 THRU

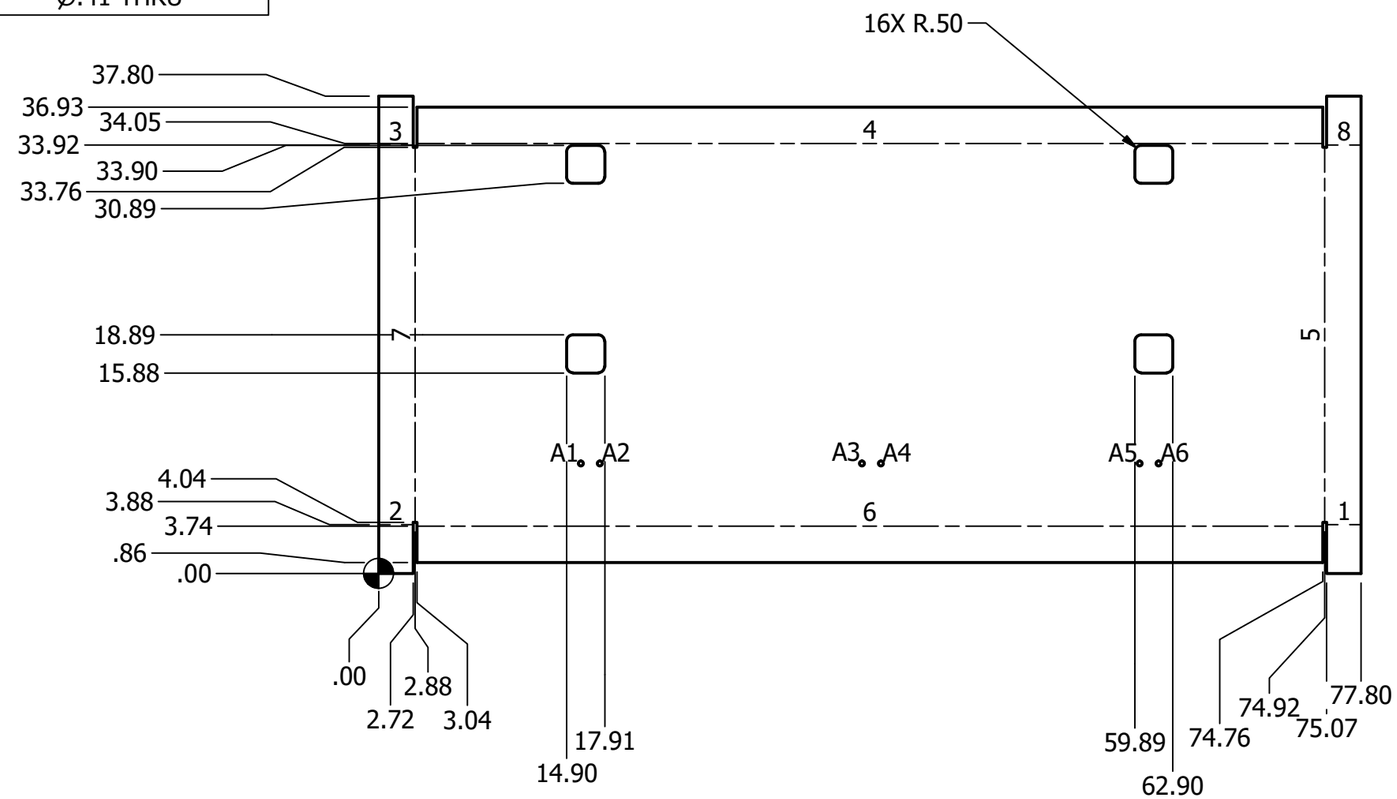

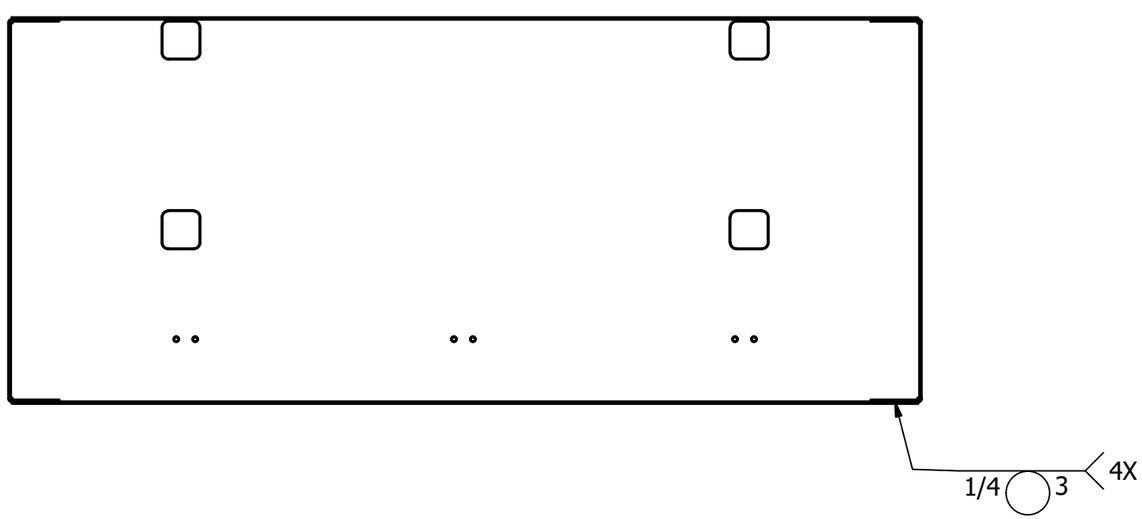

DRAWN KAI MANGIARACINA	10/16/2018	PURDUE UNIVERSITY
CHECKED		TITLE
QA		BASE SHEET
MFG		
APPROVED		SIZE B / DWG NO 2205-2 / REV
MATL: 10 GA. STL		SCALE 1/12 / UNITS: CI / SHEET 1 OF 1